Hydraulic hoisting winches

Serie P / Model P 6

DIMENSIONS (mm)

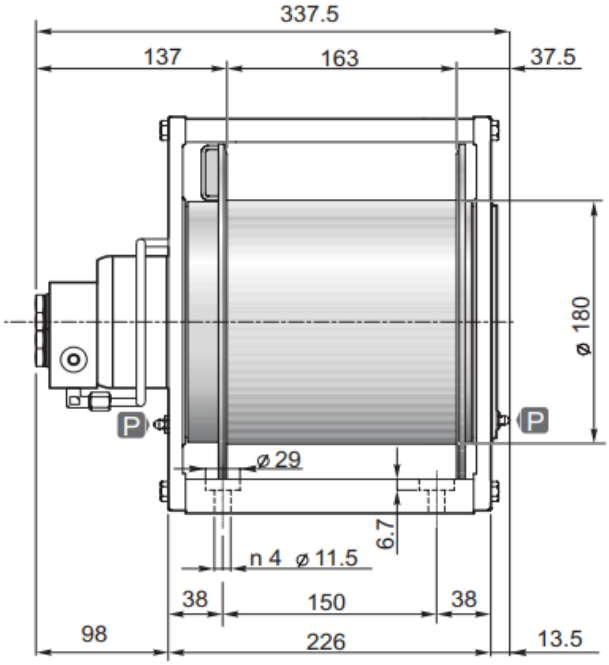

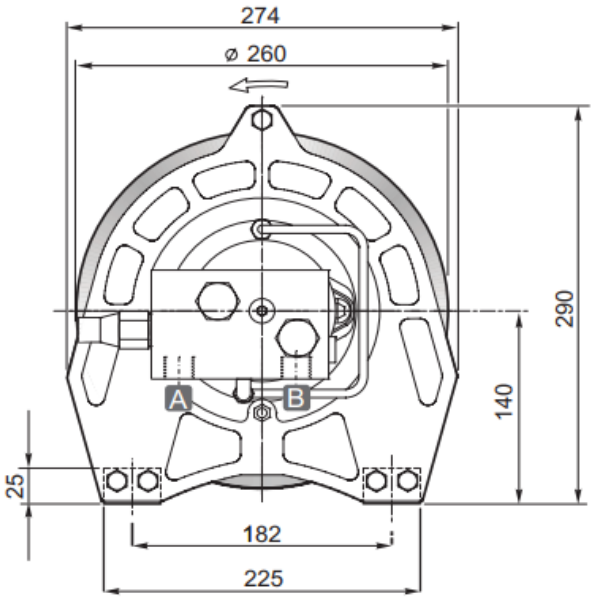

TECHNICAL DATA

Hoisting pressure	max/min pump flow	Motor displacement	Gear ratio	Advised rope diameter	Weight	Connections A&B
bar	*l/mn*	*cm3*	*1 :*	*mm*	*kg*	
115	*40/10*	*100*	*6*	*7*	*33*	*1/2"*

Rope layer		**1**	**2**	**3**	**4**
Line pull	*daN*	*750*	*700*	*650*	*600*
Rope speed with 20l/mn	*m / mn*	*24.5*	*26.5*	*28*	*30*
Rope capacity smooth drum	*m*	*13*	*25*	*38*	*57*
Rope capacity grooved drum	*m*	*11*	*23*	*36*	*50*

OPTIONS

- Cable tensioner
- Cable tensioner and lowering rope end micro switch
- Cable tensioner and hydraulic lowering end stroke
- CE standard kit
-