Digital tilt device and ON/OFF automatic self leveling device

Serie IDXYmP MkII

DESCRIPTION

- Digital tilt device able to measure one anlge on 2 axis
- 2 other exits for the axis or 4 exits for semi-axis
- Delay for activation / re-activiation programmable
- Sécurity: Category B (EN 954-1) or PL b (EN 13849-1)
- Can be configured to the request of the customer
- Angles can be setted from -20° to +20°, with step of 1/10 degree
- Exits can be a relay contact or a positive transistor
- Filtring of noises andvibrations done in Hardward and software
- Inputs and Outputs protected against the inversion of polarity? Over tensions and short-circuits(1)
- Box composed if 15% Nylon 6 charged glass fiber
- No parts in movment.
- Zero wire to put the system to 0 very easily

(1) In case of a exite type relay, an external fuse must be put (not supplied)

OPTIONS

- Digital input to select a second alarm level
- Auxiliary transistor exit for a pre-alarm function (instead of exits axes and semi-axes)
- **Category 3 (EN 954-1) or PLd (EN 13849-1)**

Serial port RS-232 to set the parameters

TECHNICAL DATA

	Transistor exits	Relay exits
Power supply	9 to 33 Vcc	12 V_{CC}: from 9 to 16.8 V_{CC} @ 20°C (2) 24 V_{CC}: from 18 to 33 V_{CC} @ 20°C (2)
Axis exits and semi-axes maximum current	1.5 A (2.5 A if only one exit activated) (3)	
Output maximum current	Positive: 2.0 A | Negative: 0.6 A	3.0 A (4)
Consumption	30 mA (5)	
Angle of intervention	From –20° to +20° on each axe	
Precision	1% FS	
Resolution	0.025 °	
Temperature drift (Zéro point)	±0.008 °/°C (typ.)	
Working temperature	From -40 to +70 °C (6)	
Standard protection level	IP 66/67	
Standard length of wire	30 cm	
Norms: ImmunitY | Emission	EN 61000-6-2 | EN61000-6-3 EN 13309 (7)	
Vibration Résistance	EN 60068-2-6: 10 g, 10 à 150 Hz (8)	
Shocks Résistance	EN 60068-2-27: 200 g, 6 ms (8)	
DC / MTTFd	DC=96% and MTTFd ≥ 100 years (for each chanel) for the transistor exit version	

(2) 12 V_{CC}: from 10.2 to 16.2 V_{DC} @ 70°C. 24 V_{CC}: from 20.4 to 32.4 V_{CC} @ 70°C

(3) Outputs excluded (2 outputs together maximum)

(4) Protected by an external speed fuse

(5) With loads on exit

(6) From -20 to +70 °C for Category 3 or PL d version

(7) Exclu Pulsation 5 (ISO 7637)

(8) For versions with relay outputs the following norms are valid: EN 60068-2-6: 5g, 10 to 150Hz and EN 60068-2-27: 30g, 6ms

DIMENSIONS (mm)

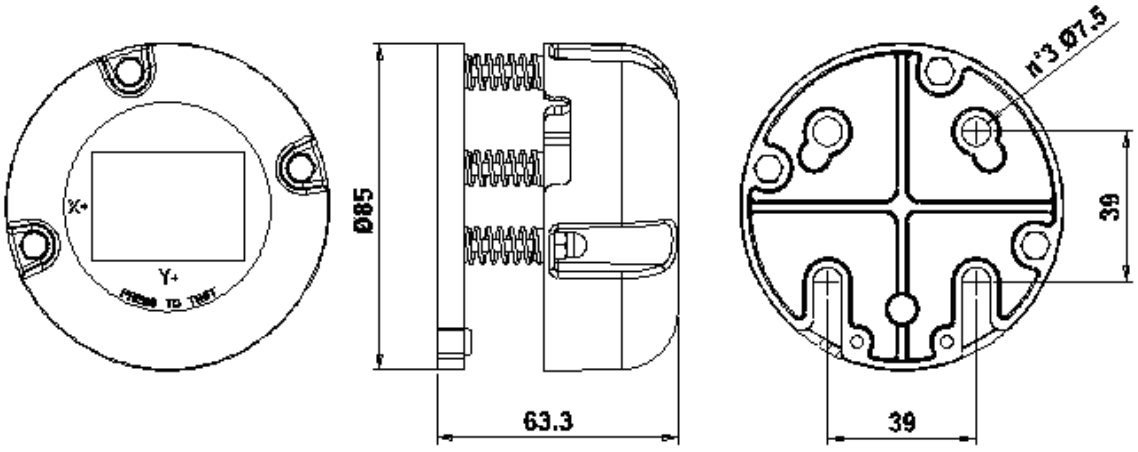

SENERGY – 6, Rue Capitaine Georges Madon – 51100 REIMS – tél : 03.26.79.00.50 – fax : 03.26.79.00.51 – contact@senergy.fr - www.senergy.fr